envirovent

ENERGISAVA® 260

Lightweight & Compact Whole House Heat Recovery Unit

B

ENERGISAVA® 260

Lightweight & Compact Whole House Heat Recovery Unit

A

About

Ideal for smaller houses and apartments the energiSava®260 is one of the most compact and lightweight on the market, achieving a high thermal efficiency of 88%.

Features & Benefits

- High thermal efficiency up to 88%
- Exceptionally compact
- Can fit into the space of a standard kitchen cupboard
- Versatile installation - wall or ceiling mounting
- Switch Live
- SAP PCDB listed
- Energy Savings Trust Best Practice Performance Compliant
- 2 year warranty
- Right Hand and Left Hand versions available
- Incorporates Intellitrac® Technology, the unique humidity tracking controls
- Three speed wireless remote control as standard
- Automatic and integral thermal summer by-pass
- Frost protection
- Easy mounting brackets
- Lightweight, one-man installation
- App version available
- Easy exchangeable filters

How does it work?

The energiSava® 260 provides optimum ventilation for a property with a minimum loss of energy. It extracts moisture-laden air from the wet rooms such as bathrooms, WCs, kitchen and shower rooms. At the same time it supplies filtered air into the living areas (living rooms, bedrooms, dining room).

The energy from the extracted air is transferred to the new filtered air and re-supplied into the property, creating an all year round, ideal indoor environment. Suitable for Kitchen + 5 additional wet rooms and achieving a maximum airflow of 310 m³/hr (86 l/s), the energiSava® 260 delivers not only the utmost practicality in installation flexibility, it also performs with exceptional efficiency, achieving a low Specific Fan Power of 0.57 W/l/s

Functionality & Design

The system continuously operates at a low level to ensure that the home is correctly ventilated, providing all year round good indoor air quality.

The energiSava® 260 can be boosted via the switch live function or remote control to provide increased boost and third speeds. The wireless controller also indicates when the summer by-pass, frost protection and humidity tracking functions are activated. The thermal, automatic and integral summer by-pass controls the temperature of the air entering the home on warmer days. The easy push button commissioning pad enables the installer to correctly set the required airflow rate quickly and effectively.

Wall

Ceiling

Peace of Mind

Manufactured in the UK the energiSava® 260 comes with a 2 year warranty as standard. To ensure the optimum performance of the system, it is important to maintain the unit. This can be done by simply removing the front cover and accessing the exchangeable filters **(order code: FILTER-ESG3).**

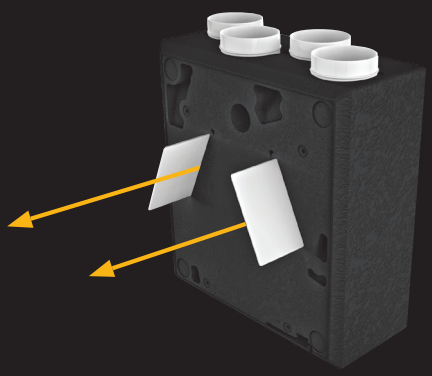

Incredibly Versatile

The energiSava® 260 has been designed for ease of installation in mind. With vertical or horizontal mounting options, this powerful little heat recovery unit can be installed on the wall or ceiling. It can even fit within a 600mm kitchen cupboard (depth 290mm).

For wall mounting applications it comes complete with easy-fit brackets for rapid installation without the requirement to access the unit.

my envirovent

Revolutionise the way you control your ventilation system.

The energiSava® 260 is now available with the new myenvirovent App. It is designed to offer total control of the unit from anywhere in the home at the touch of a button. Not only does it provide smart userability for the resident, it also enables rapid commissioning for the installer:

- Greater control of ventilation requirements in the home
- Manage ventilation rates from anywhere in the home, from trickle, to boost, to third speed.
- Multiple user access
- Filter change notifications
- Instant unit status
- Secure connection through a router
- Commissioning from a mobile device

Intellitrac® Technology

The energiSava® 260 incorporates Intellitrac® Technology, the unique humidity tracking controls.

The system continuously operates at a low level to ensure that the home is correctly ventilated, providing good indoor air quality with no user intervention required. As humidity rises and falls, the motor speed rises and falls in correlation. This controls condensation and reduces the time that the system operates on maximum speed, helping to save energy.

SAP Appendix Q Performance

Exhaust Terminal Configuration - Kitchen + Additional Wet Rooms	Specific Fan Power (W/l/s)	Heat Recovery Efficiency (%)
Kitchen + 1 additional wet room	0.57	88
Kitchen + 2 additional wet rooms	0.68	85
Kitchen + 3 additional wet rooms	0.83	83
Kitchen + 4 additional wet rooms	1.02	82
Kitchen + 5 additional wet rooms	1.29	81

For sound data figures, please contact envirovent on **01423 810 810.**

Technical Data

Maximum Flow Rate	86 l/s (310 m³/hr)
Heat Exchanger	Counter Flow (Plastic)
Efficiency	88%
Fans	EC
Specific Fan Power	0.57 W/l/s
Electrical Supply	230V / 1PH / 50Hz/60Hz
Max Power Consumption	145W
Supply Filter	ISO Coarse 45% (G3)
Extract Filter	ISO Coarse 45% (G3)
Spigot (mm)	125
Dimensions (mm)	560 x 635 x 260
Weight	14Kg

Technical Specification

Product

The energiSava® 260 shall be a compact and lightweight whole house heat recovery ventilation system.

Application Suitability

The system shall be suitable for use in small to mid-sized houses with kitchen plus up to five wet rooms and designed primarily for new build and major renovations. The unit shall be capable of being either wall or ceiling mounted. It shall be suitable for installation in an accessible loft or internal cupboard space. It shall be a single person installation with easy commissioning features. The unit shall incorporate Ø125 extract and supply spigots.

Installation

Full installation guide shall be enclosed with all products; or sent separately in advance if required.

Motor

The unit shall incorporate Ultra Low Watt EC motor technology to provide the lowest possible SFP and unit running costs with sealed for life ball bearings and designed to operate continuously at a pre-set 'background' rate.

Fan Impeller

EC motors shall power the centrifugal forward curved fan impellers.

Heat Exchange Cell

The heat exchange cell shall be a high efficiency counter flow cell capable of up to 88% efficiency.

Servicing / Maintenance

envirovent recommend that units should be serviced annually to maintain optimal performance and that filters should be checked regularly and cleaned as and when required.

Filtration

The unit shall be supplied with plug out / plug in ISO Coarse 45% (G3) filters on the supply and extract inlets.

Warranty

The envirovent energiSava 260 units are covered by a parts only 2-year warranty. Please note that conditions and exclusions apply to the warranty which can be found at www.envirovent.com/warranty

Controls

The unit shall be fitted with Intellitrac® humidity tracking system and a single switch live input with wireless boost and third speeds. The wireless controller shall also indicate when the summer by-pass, frost and humidity tracking functions are activated.

Manufacturer

Unit shall be the energiSava® 260 as manufactured by envirovent Ltd.

Accreditation

SAP PCDB Listed.

Conforms to the requirements of the UK Building Regulations and the Technical Standards for Ventilation.

Conforms to requirements of the EC council directives relating to Electromagnetic Compatibility and Electrical Safety (LDV and EMC).

CE Marked.

Performance Curve

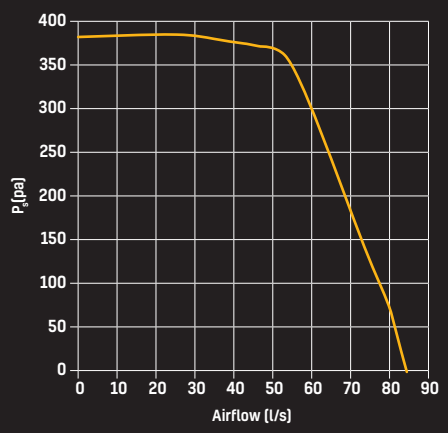

Dimensions (mm)

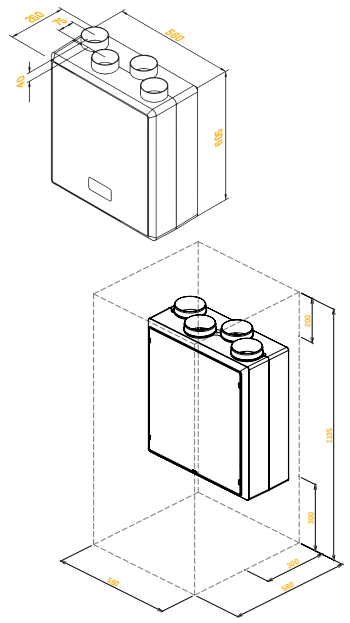

envirovent

envirovent®
because your air matters

envirovent Ltd
Harrogate West Business Park
Unit 1 Bardner Bank
Killinghall, Harrogate
HG3 2SP

T / 01423 810 810
E / enquiries@envirovent.com
W / www.envirovent.com

Follow us on **facebook**

Follow us on **Instagram**

Watch us on **Youtube**

Find us on **LinkedIn**

Scan **Me**

Due to our policy of continuous innovation and improvement, envirovent reserves the right to alter products specification and appearance without notice.

E&OE | MKT ENV624 - V11 - 28/09/2026

Copyright © envirovent Ltd 2026

ISO 9001 QUALITY MANAGEMENT

ISO 14001 ENVIRONMENTAL MANAGEMENT

recycle

EDA ELECTRICAL DISTRIBUTORS ASSOCIATION AFFILIATED MANUFACTURER

TRUSTMARK Government Endorsed Quality

NICEIC APPROVED CONTRACTOR