luma® plus QUICK GUIDE

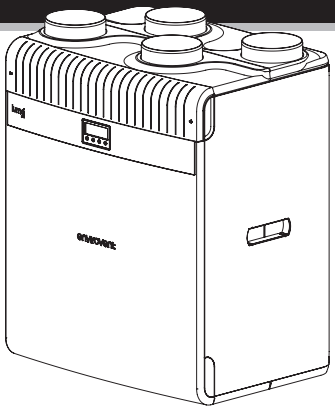

SCAN ME

Please scan our QR code to see installation guides for this product.

Or visit:
www.envirovent.com

USERS

This unit is not intended for use by persons [including children] with reduced physical, sensory or mental capabilities or lack of experience and knowledge, unless they have been given supervision and usage instruction by a person responsible for their safety. Children should be supervised to ensure they do not play with the unit. Cleaning and user maintenance must not be performed by children.

SAFETY

Read and understand these instructions carefully before beginning installation. The unit should only be installed by a competent person.

LOCATION

Check there is space for the unit in your chosen location including room for access and future servicing of the unit. The unit must not affect the operation of open-flued appliances. Consider the external vent locations in relation to open-flues from appliances e.g. boilers. You must ensure the external supply grilles are positioned away from external flues to avoid drawing harmful gases into the property. Consult your local regulations or a qualified gas engineer. envirovent recommends at least 2m clearance.

ELECTRICAL CONNECTION

The unit requires a continuous electrical power supply. Connection to the fixed wiring must be made outside the unit in a suitable location. The unit must be able to be disconnected from the mains supply after installation. The unit must be earthed and a suitable isolator having a minimum contact separation of 3.0mm must be used to provide isolation for the unit.

The power cable running into the unit must remain the supplied flexible cable if the power cable becomes damaged, it must be replaced by envirovent, an authorised service agent for your region/country, or a similarly qualified person in order to avoid a hazard. Do not remove or tamper with any electronic components inside the unit.

All wiring must comply with Building Regulations and the current IET Wiring Regulations (BS7671 in the UK) or equivalent standards for other countries. The final installation should be examined and tested by a qualified electrician.

This product is not suitable for use with a Type AC RCD 

INSTALLATION

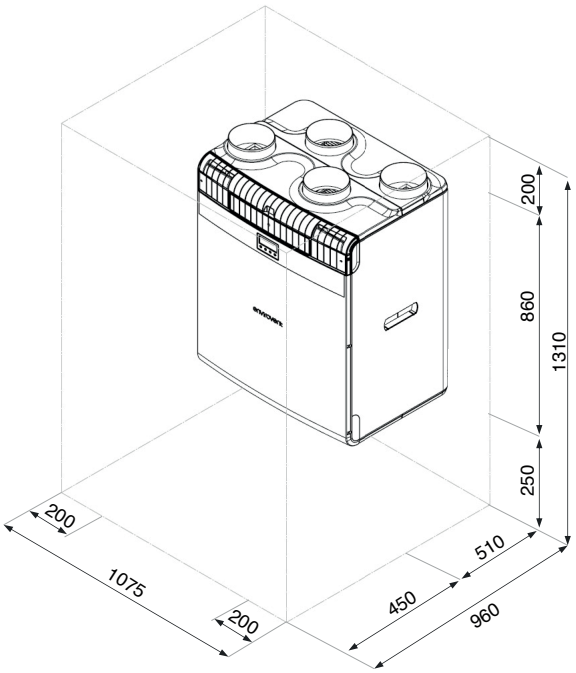

Overall unit dimensions & minimum area required for access & maintenance (mm).

1. Ensure that the chosen location is sized appropriately for the unit and can accommodate the ducting, filters, condensate, electrics as well as servicing and maintenance.
2. Once you are satisfied with the position of the unit, fix the wall bracket in place using 4x 8g x 2.0" screws, and 4x plasterboard plugs.
3. Place the cable tie fixings through the cable tie and screw to the unit and wall. This can either be on the left or right depending upon unit location.
4. Place the unit onto the wall bracket. Pull the cable tie together so that there is a small amount of slack remaining. This will prevent the unit from being knocked off the wall mounting bracket.
5. Luma® plus offers on-site handing as standard. The units have default right hand connections in terms of spigot arrangement and drainage.
6. If a left handed unit is required, remove the rubber bung from the drainage connector on the left hand side and place it in the right hand drainage connector. This will also need to be altered via the **Install** menu on the controller.

To alter the handing, the power to the unit must be switched off for the changes to take effect.

For further installation steps please refer to the full installation guide available via the QR code or on our website.

DUCTING

Ducting should be fitted in accordance with Approved Document F or local regulations. Ducts to and from atmosphere and through unheated spaces need to be insulated. For efficiency, all ductwork should be as large a diameter as possible (min.Ø150mm) and use rigid or semi rigid duct. Short lengths of flexible duct can be used for final connections only.

LEFT HAND UNITS

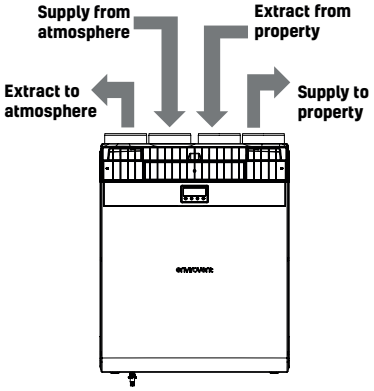

RIGHT HAND UNITS

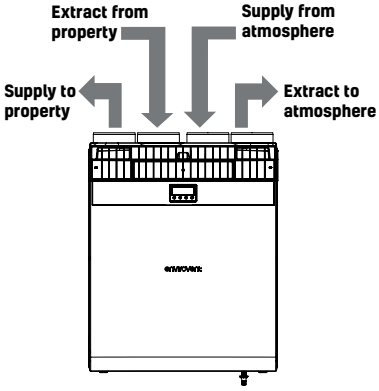

Suitable for use with Ø150mm ducting

CONDENSATE DRAIN

The condensate drain should be connected to a suitable non-return valve to prevent air and water from the drain system flowing back into the unit. The drain locations differ if the unit is left or right handed.

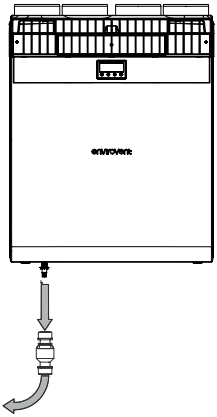

LEFT HAND

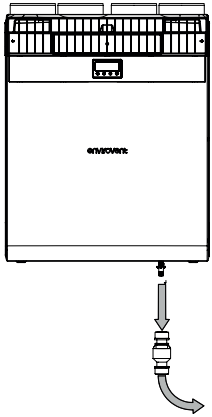

RIGHT HAND

WIRING

The local isolator must be connected to the mains as part of the fixed wiring. Connect the cores of the power cable to the matching terminals on the local isolator (3A fuse spur or similar). The black switch live core of the mains cable can be wired to a switch input such as a light switch. When the switch is turned on, the boost function is engaged. When the switch is turned off, the unit will return to normal running mode. In this configuration a triple pole isolator must be used.

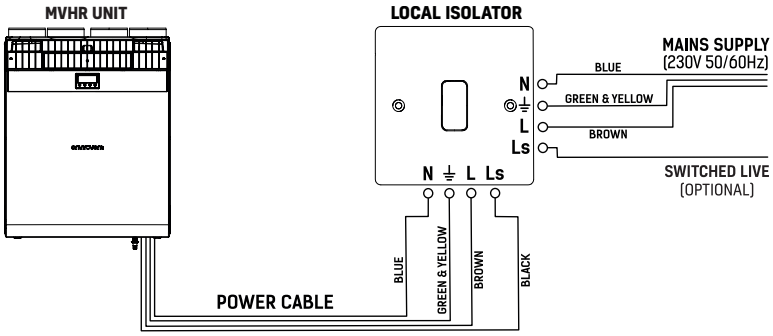

FILTER MAINTENANCE

- envirovent recommend that filters are checked regularly and replaced as required. The unit should be isolated from the mains when replacing or cleaning filters.

- Areas with high particulate matter for example industrial areas, or higher-grade filters will become clogged quicker and will need replacing more frequently. Spare and replacement filters must be genuine envirovent parts.

Failure to maintain the unit as recommended may breach the terms of the warranty.
See full warranty terms and conditions for further information.

HOW TO CHANGE FILTERS

- Isolate the unit from the mains supply.
- Lift the hinged top cover, and then remove the filter cover. Remove the old filters, replace with new filters then reinsert filter cover and pull the hinged top cover back down.
- Turn the unit back on. Navigate to the **Reset** section of the controls as per the above menus.
- Reset the filter countdown option to the desired length of time.

WARRANTY

luma® plus units are covered by a parts only 5-year warranty.
Please note that conditions and exclusions apply to the warranty which can be found at:
www.envirovent.com/warranty

---

envirovent Ltd, Harrogate West Business Park, Unit 1 Bardner Bank, Killinghall Harrogate HG3 2SP.

T / 01423 810 810
E / info@envirovent.com
W / envirovent.com

Boxed unit weight: 28kg

Unboxed unit weight: 26kg

E&OE | MKT ENV1679 - V7 - 02.11.26
Due to our policy of continuous innovation and improvement envirovent
reserves the right to alter products specification and appearance without notice.